TECHNICAL DATA

Three Phase Electric Motors - Cast Iron Frame
PE30 225M-8
22 kW / 30 Cv
730 RPM

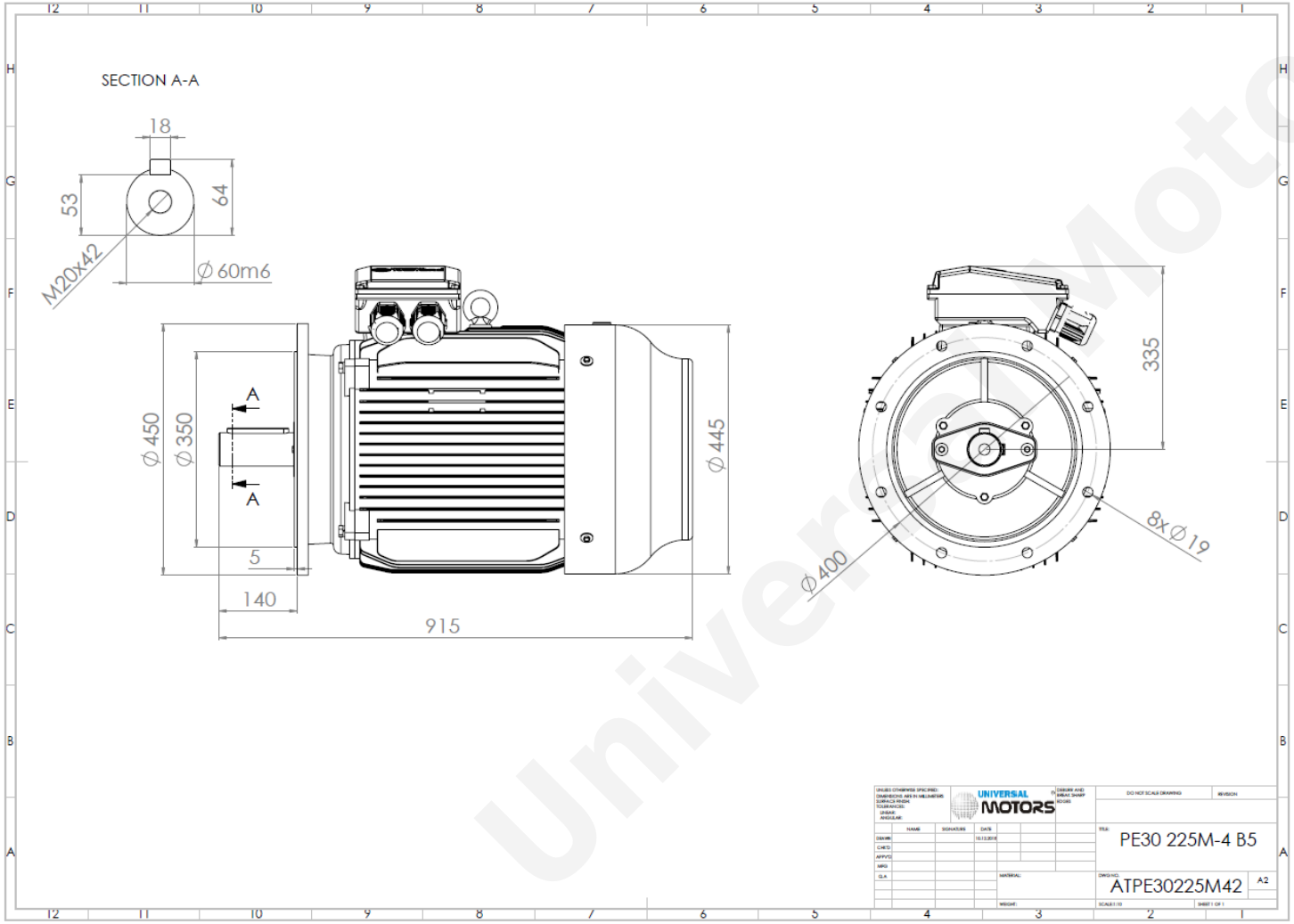

Motor type:	**PE30 225M-8**
Output:	**22 kW / 30 Cv**
Speed (min^{-1}):	**730 RPM**
Frequency:	**50 Hz**
Voltage:	**400 V**
Current:	**44.9 A**
Power factor (Cos Ø):	**0.78**
Poles:	**8**
Insulation class:	**F**
Temperature rise Class:	**B**
Efficiency 50%:	**89.4 %**
Efficiency 75%:	**90.9 %**
Efficiency 100%:	**90.6 %**
Torque:	**287 N.m**
Tstarting/Tnominal:	**1.9**
Istarting/Inominal:	**6.6**
Tmaximum/Tnominal:	**2.0**
Noise:	**73 Db(A)**
Weight:	**334 Kg**
Bearing DE:	**6313 C3**
Bearing NDE:	**6313 C3**

Regime - S1 **Altitude - 1000m** **Environment Temperature - 40ºC**

* References applied only in the UK

CONTACTS:

UNIVERSAL MOTORS
Rua de São Brás,745
4480-782 VILA DO CONDE

Tel: +351 252 299 080
Fax: +351 252 299 089
Mail: geral@universalmotors.pt

Universal Motors